Jurnal SENOPATI

Sustainability, Ergonomics, Optimization, and Application of Industrial Engineering
Jurnal homepage : ejurnal.itats.ac.id/senopati

Anthropometric-Based Ergonomic Assessment of Student Chairs to Prevent Musculoskeletal Discomfort

Taufik Ramadhan Fitrianto[1], Bahtiar Rahmat[2], Siska Anggiriani[3], Desy Mulyosari[4], Nurhanifah[5], Alfani Risman Nugroho[6], Muhammad Afif Affandi [7]

[1,2,3,4,5,6,7] Program Studi Teknik Produksi Furnitur, Politeknik Industri Furnitur dan Pengolahan Kayu, Jalan Wanamarta Raya no 20, Kawasan Industri Kendal, Wonorejo, Kendal, Jawa Tengah

INFORMASI ARTIKEL

Halaman:
160 – 170
Tanggal penyerahan:
13 Oktober 2025
Tanggal diterima:
17 April 2026
Tanggal terbit:
30 April 2026

EMAIL

[1]taufik.fitrianto@poltek-furnitur.ac.id
[2]bahtiar.rahmat@poltek-furnitur.ac.id
[3]siska.anggiriani@poltek-furnitur.ac.id
[4]desy.mulyosari@poltek-furnitur.ac.id
[5]nurhanifah@poltek-furnitur.ac.id
[6]alfani.risman@poltek-furnitur.ac.id
[7]m.affandi@poltek-furnitur.ac.id

ABSTRACT

Many students at Politeknik Industri Furnitur dan Pengolahan Kayu have reported musculoskeletal discomfort after prolonged sitting in classroom chairs, including lower back pain, neck stiffness, and shoulder tension. These complaints suggest that the existing chairs may not accommodate users' anthropometric characteristics. This study aimed to evaluate the ergonomic compatibility of current student chairs and to redesign their dimensions based on anthropometric data to meet both national and international ergonomic standards. The research was conducted through three main stages: (1) identifying discomfort areas using the Nordic Body Map (NBM) questionnaire, (2) collecting key body measurements from male and female students, and (3) performing a mismatch analysis between anthropometric dimensions and chair parameters. The analysis revealed a high level of mismatch—particularly in seat height, depth, and backrest dimensions—which correlated with the prevalence of MSD complaints. A redesigned chair model was then proposed based on student anthropometry and evaluated against available standards. The redesigned dimensions significantly reduced mismatch rates for both male and female users, indicating improved ergonomic compatibility. Alignment with international standards further supports the potential of this design to enhance comfort and reduce musculoskeletal risks. However, despite its functional improvements, the new chair proportions may appear less visually balanced, necessitating further refinement in aesthetic and structural aspects before implementation.

Keywords: *ergonomic design, anthropometry, musculoskeletal disorders, SNI, ISO 9241-5, BIFMA G1, EN 1335-1, mismatch analysis*

ABSTRAK

Banyak mahasiswa di Politeknik Industri Furnitur dan Pengolahan Kayu melaporkan keluhan gangguan muskuloskeletal (MSDs) setelah duduk dalam waktu lama di kursi kelas, seperti nyeri punggung bawah, kaku leher, dan tegang bahu. Keluhan tersebut mengindikasikan bahwa desain kursi yang digunakan belum sesuai dengan karakteristik antropometri penggunanya. Penelitian ini bertujuan untuk mengevaluasi kesesuaian ergonomis kursi mahasiswa yang ada serta merancang ulang dimensinya berdasarkan data antropometri agar sesuai dengan standar ergonomi nasional dan internasional. Penelitian dilakukan melalui tiga tahap utama: (1) identifikasi area ketidaknyamanan menggunakan kuesioner Nordic Body Map (NBM), (2) pengukuran dimensi tubuh utama mahasiswa laki-laki dan perempuan, serta (3) analisis ketidakcocokan antara dimensi antropometri dengan dimensi kursi. Hasil analisis menunjukkan tingkat ketidaksesuaian yang tinggi pada tinggi dudukan, kedalaman dudukan, dan dimensi sandaran, yang diduga berkorelasi dengan tingginya keluhan MSD. Berdasarkan data tersebut, dilakukan perancangan ulang kursi yang kemudian dibandingkan dengan standar yang berlaku. Dimensi kursi hasil rancangan menunjukkan penurunan tingkat ketidakcocokan yang signifikan untuk mahasiswa laki-laki maupun perempuan, menandakan peningkatan kesesuaian ergonomis. Kesesuaian dengan standar internasional juga memperkuat potensi desain baru ini dalam meningkatkan kenyamanan dan menurunkan risiko MSD. Namun demikian, proporsi visual kursi hasil rancangan terlihat kurang seimbang sehingga diperlukan penyempurnaan lanjutan pada aspek estetika dan struktural sebelum diterapkan secara luas.

Kata kunci: *desain ergonomi, anthropometri, musculoskeletal disorders, SNI, ISO 9241-5, BIFMA G1, EN 1335-1, analisis ketidakcocokan*

INTRODUCTION

Prolonged sitting is a central component of students' daily academic routines. However, educational furniture often fails to accommodate users' anthropometric characteristics, resulting in postural strain and musculoskeletal discomfort. Inadequate seating posture has been widely recognized as a precursor to musculoskeletal disorders (MSDs), manifesting as back pain, shoulder tension, and neck stiffness, which can impair students' physical health, concentration, and learning performance. Empirical evidence from Indonesia [1] indicates that non-ergonomic seating arrangements substantially decrease user comfort and productivity while promoting static postures that contribute to spinal loading and muscle fatigue [2].

Extensive ergonomic research in industrial and office environments consistently demonstrates that furniture which neglects anthropometric variation exacerbates discomfort and increases the risk of MSDs. For example, studies reported that female operators using non-ergonomic chairs exhibited significantly higher discomfort, particularly in the lower back (88%) and waist (84%). Similarly, several Indonesian office chair types have been found to produce elevated Rapid Entire Body Assessment (REBA) scores, placing them within the high-risk category for MSDs [3]. These findings collectively emphasize a persistent issue: chair dimensions in Indonesia often fail to reflect the anthropometric diversity of their users.

Although the Indonesian National Standard (SNI 8780:2019) for wooden office chairs has been established, it primarily specifies minimum dimensional requirements without providing upper limits or adjustment ranges. Consequently, many domestically produced chairs remain excessively high or deep, leading to unsupported lower limbs, inadequate lumbar contact, and postural discomfort. In contrast, international standards such as ISO 9241-5, BIFMA G1, and EN 1335-1 provide more comprehensive dimensional guidelines that accommodate a wider range of users. However, empirical research comparing Indonesian educational furniture to these global standards remains limited—leaving a significant gap in ergonomic evaluation and design adaptation for student populations.

Recent studies underscore the importance of anthropometry-based and user-centered design in creating functional furniture. For example, Sopyana and Jazuli designed ergonomic school chairs for children with autism by applying rational design principles and anthropometric percentiles (5th, 50th, and 95th), resulting in seating that addressed both physical and sensory needs [4]. Similarly, ergonomic evaluations at Politeknik Industri Furnitur dan Pengolahan Kayu revealed that existing office chairs caused lower back, neck, and shoulder discomfort—particularly among female users. Subsequent redesigns, guided by anthropometric data, achieved compliance with both national and international standards, effectively reducing mismatch and improving comfort [5][6].

Complementing these workplace findings, research in educational settings also highlights the critical role of dimensionally appropriate seating. Vos et al. found that chair design had the greatest impact on seat–pan pressure distribution, with noticeable gender-related differences, while Lee et al. demonstrated that workstation adjustments based on individual anthropometric data significantly reduced musculoskeletal discomfort in the neck, shoulders, and upper back [7][8]. Despite this growing body of evidence, educational institutions—including at the Politeknik Industri Furnitur dan Pengolahan Kayu—remains inadequately aligned with students' body dimensions. This mismatch not only undermines comfort but also poses long-term risks to students' posture and musculoskeletal health.

Building on these insights, the present study evaluates the current student chair design at Politeknik Industri Furnitur dan Pengolahan Kayu and redesigns its dimensions using the anthropometric data of its student population. Unlike most Indonesian ergonomic studies that focus solely on risk assessment, this research emphasizes design modification and comparative validation against both SNI and international standards. The redesigned chair aims to reduce anthropometric mismatch, enhance comfort, and establish a reference framework for evidence-based ergonomic design in educational environments.

METHODS

This study aims to evaluate the ergonomic suitability of classroom chairs used by students at the Politeknik Industri Furnitur dan Pengolahan Kayu. The evaluation combines both subjective

and objective approaches: a subjective assessment using the Nordic Body Map (NBM) questionnaire to identify discomfort during prolonged sitting, and an objective evaluation based on anthropometric measurements and mismatch analysis between students' body dimensions and existing chair sizes. The findings are then used to propose an anthropometry-based redesign to improve comfort and reduce the risk of musculoskeletal disorders (MSDs). The methods are shown in Figure 1.

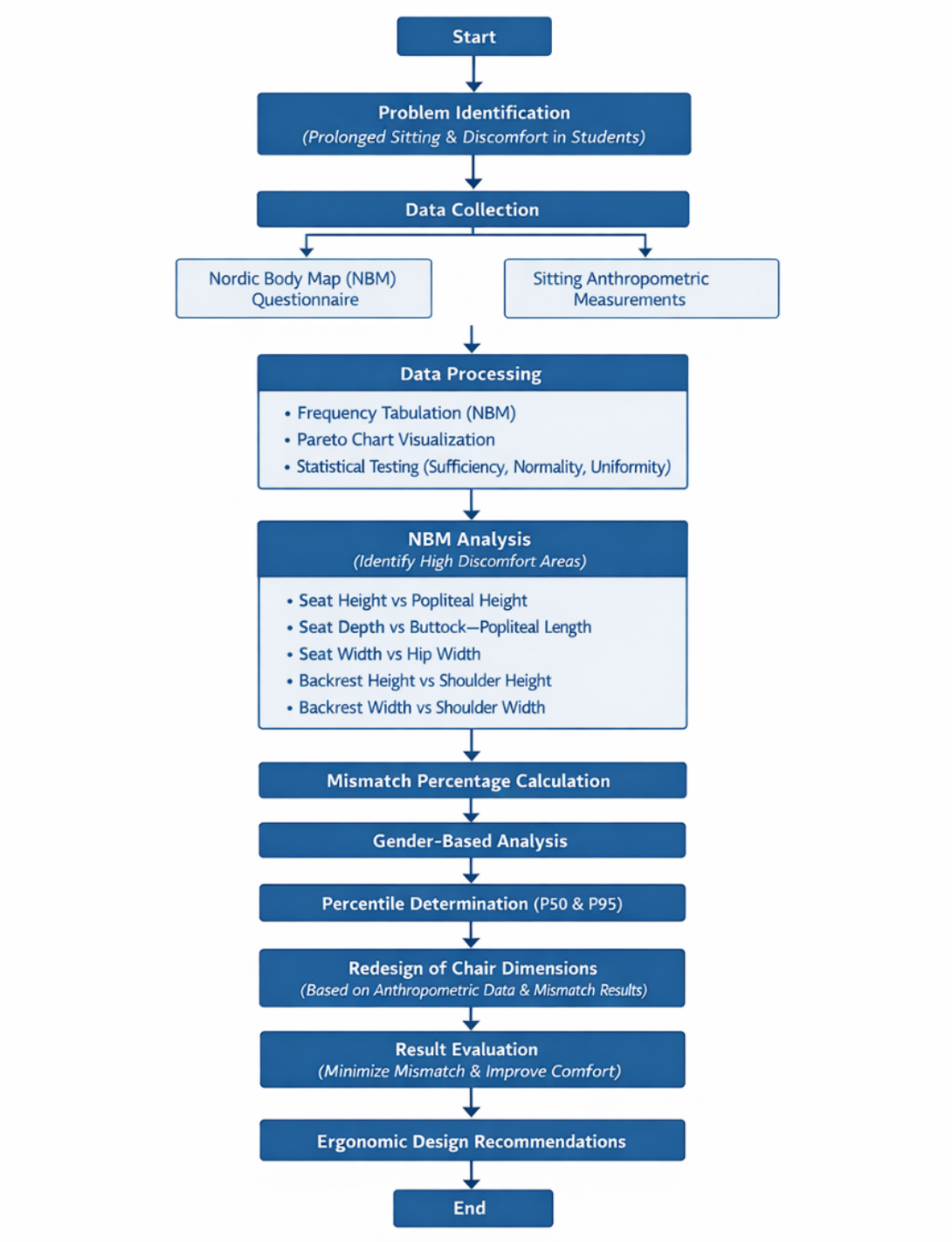

Figure 1. Methods used in this research

Nordic Body Map (NBM)

The Nordic Body Map (NBM) questionnaire was used to identify and quantify discomfort in different regions of the body after prolonged sitting in class. Respondents indicated the intensity and frequency of discomfort across 27 standardized body regions, including the neck, shoulders,

upper and lower back, hips, and legs. The NBM is widely used in ergonomic research because it provides both qualitative and quantitative insight into musculoskeletal complaints, enabling systematic identification of high-risk body areas.

The collected data were tabulated into frequency distributions and visualized using a Pareto chart, allowing prioritization of the most frequently affected body regions. Particular attention was given to discomfort in the lower back, shoulders, and neck, which are commonly associated with poor seating ergonomics in learning environments. To account for possible gender-based differences in posture and body proportions, results were analyzed separately for male and female students. This approach ensures that the proposed redesign accommodates anthropometric variability between groups, leading to a more inclusive ergonomic solution. Current student chair model are shown in Figure 2.



Figure 2. Current student chair with separated table

Mismatch Analysis

A mismatch analysis was conducted to determine the degree of incompatibility between students' anthropometric dimensions and the measurements of existing classroom chairs. Anthropometric data were collected from students who currently studying in Polytechnic representing a typical range of body sizes within the student population. The analysis was based on established ergonomic guidelines and prior research in seating design [7] [9]. Five key dimensional relationships were examined in Figure 3.

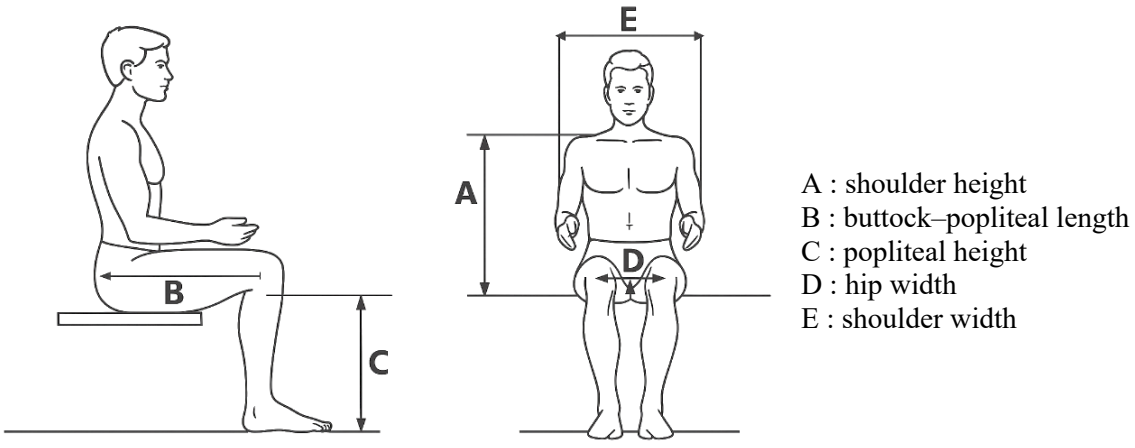

Figure 3. Body part used for Anthropometric measurement

- Seat height vs. popliteal height: The optimal seat height should range between 88% and 95% of the user's popliteal height[10][11]. A seat that is too high causes the feet to dangle, increasing pressure on the thighs and lower back, while a seat that is too low results in excessive knee flexion and restricted circulation.
- Seat depth vs. buttock–popliteal length: Recommended seat depth is between 80% and 95% of the buttock–popliteal length [11][12]. Excessive depth prevents the user from leaning comfortably against the backrest, reducing lumbar support; insufficient depth limits thigh support and stability.
- Seat width vs. hip width: The seat should be 10–30% wider than the user's hip width to provide sufficient lateral clearance without sacrificing stability [10]. Too narrow a seat compresses the hips, while overly wide seats hinder proper armroest use.
- Backrest height vs. shoulder height: The backrest should not extend above the shoulder blades [12][13] allowing upper-body mobility while maintaining adequate thoracic and lumbar support.
- Backrest width vs. shoulder width: The backrest width should approximate shoulder breadth to ensure adequate lateral support without restricting arm movement [10] [11].

Each dimensional mismatch was quantified as a percentage of the sample population outside the acceptable ergonomic range. These results guided the determination of revised chair dimensions to ensure better anthropometric compatibility and user comfort.

Anthropometric Measurements

Anthropometric data collection was conducted while students were seated in a neutral posture on an adjustable chair to maintain measurement accuracy and consistency. Eleven key seated anthropometric variables relevant to chair design were recorded: popliteal height, buttock–popliteal length, hip width, shoulder width, shoulder height, seat-to-knee height, buttock-to-knee length, buttock-to-elbow height, seated erect height, eye height, and backrest inclination angle.

The data were tested for sufficiency, uniformity, and normality before being converted into percentiles to represent various user groups. Following ergonomic design principles, the 50th percentile (P50) was used to define average chair dimensions, while the 95th percentile (P95) was applied to parameters requiring additional clearance, such as hip width and shoulder width. The percentile-based redesign method was then applied to generate new chair dimensions that minimize mismatch percentages and address the most frequently reported discomfort areas identified in the NBM analysis. This data-driven approach ensures that the proposed design improvements are both ergonomically justified and statistically representative of the student population.

While this study primarily relied on static seated anthropometry, which provides stable baseline dimensions for chair sizing, it acknowledges that dynamic measurements, such as postural changes during learning activities, could offer further insights into long-term comfort and performance. Future research is therefore recommended to integrate dynamic and observational data to refine the ergonomic model for student seating design.

RESULT AND DISCUSSION

The Nordic Body Map (NBM) survey revealed clear gender differences in musculoskeletal discomfort (MSD) among students. Female respondents reported a higher frequency and wider distribution of complaints across nearly all body regions compared to male respondents. The most frequent complaints among women included lower back pain (16 cases), hip/thigh discomfort (9 and 8 cases for right and left sides), and shoulder pain (9 and 6 cases). In contrast, men's complaints were fewer and concentrated mainly in the neck and lower back (15 cases each). Only 3 women reported no discomfort compared to 13 men, indicating that female students experienced greater overall physical strain during classroom activities (Figure 4). These findings suggest a possible gender-based disparity in ergonomic fit between users and the existing furniture.

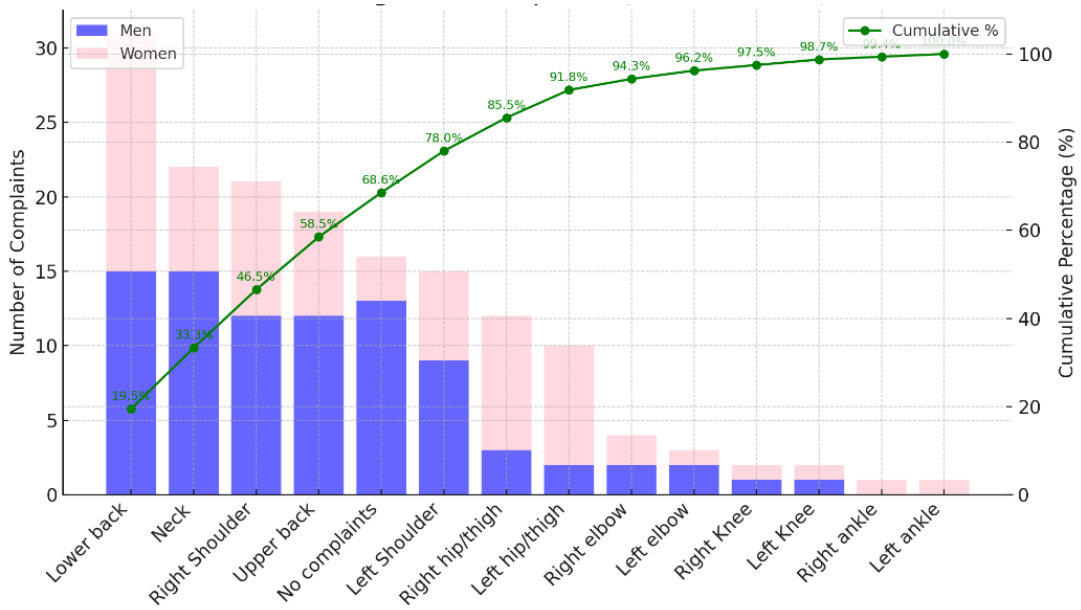

Figure 4. Pareto Chart of Aches/Pain Appearing

To identify potential causes of these discomfort patterns, anthropometric data from 66 students (46 men and 20 women) were collected in a seated position and compared with the dimensions of the current classroom chairs. The analysis focused on five parameters: seat height (SH), seat depth (SD), seat width (SW), backrest height (BH), and backrest width (BW). The results revealed substantial mismatches between student anthropometry and chair dimensions, with higher incompatibility rates among women. Seat height (C vs SH) exhibited the highest mismatch, 75% for men and 88% for women. These value are indicating that the chair height exceeded the popliteal height of nearly all users. This excessive height prevents the feet from resting flat on the floor, increases thigh pressure, and restricts blood circulation, such a conditions commonly associated with discomfort and MSDs in the lower back and legs [15][16].

Similarly, backrest height (A vs BH) showed severe incompatibility (94% for men, 96% for women), suggesting that the chair fails to support the upper back and shoulders adequately. Such lack of vertical support is linked to increased neck and upper back fatigue, which aligns with the NBM findings showing high complaint frequencies in these regions. Seat width (D vs SW) also displayed considerable mismatch, about 22% among men and 62% among women. This value indicating that female students may experience greater lateral restriction or instability due to inadequate seat breadth. In contrast, seat depth (B vs SD) and backrest width (E vs BW) showed lower mismatch percentages, suggesting that depth-related parameters are relatively more compatible with users' body dimensions.

From a physiological and biomechanical perspective, the gender differences observed in this study may also be associated with variations in postural control strategies and postural variability during prolonged sitting. Sitting should not be considered a static posture but rather a dynamic process in which individuals continuously perform micro-adjustments of the pelvis, lumbar spine, and trunk to redistribute pressure and reduce localized tissue loading. Research on seated biomechanics indicates that postural variability, this reflected in changes in lumbar curvature and center-of-pressure displacement. It plays a key role in the development and regulation of perceived discomfort during prolonged sitting tasks. As sitting time increases, individuals typically increase the magnitude of postural adjustments to relieve pressure on the buttocks and lumbar region, illustrating the concept of active sitting as a natural strategy to mitigate musculoskeletal loading [17].

However, when furniture dimensions are poorly matched with user anthropometry, these adaptive postural adjustments may become restricted, resulting in sustained muscle activity and increased localized pressure on the lumbar and gluteal regions. Recent ergonomic studies on classroom furniture further emphasize that seat design, posture alignment, and pressure distribution

significantly influence students' perceived comfort and musculoskeletal risk during prolonged sitting [13] [18].

In the present study, the high mismatch rate in seat height suggests that many students were unable to maintain stable lower-limb support, potentially limiting natural postural adjustments. This condition may disproportionately affect female students because they generally present smaller anthropometric dimensions such as lower popliteal height and hip breadth relative to standardized chair dimensions. Consequently, restricted opportunities for effective active sitting and postural variability may partly explain the higher prevalence and broader distribution of musculoskeletal discomfort reported among female respondents.

The correspondence between the NBM results and mismatch analysis indicates a strong relationship between MSD symptoms and poor anthropometric fit. When furniture dimensions fail to accommodate body proportions, postural deviations occur, leading to increased localized pressure, spinal load, and muscular fatigue [21][22][23]. These findings highlight the urgent need to redesign the student chair using anthropometric data to achieve better ergonomic compatibility. Previous studies have also noted that women are particularly vulnerable to MSDs due to their generally shorter popliteal height, narrower shoulder width, and different pelvic morphology compared to men [24][25].

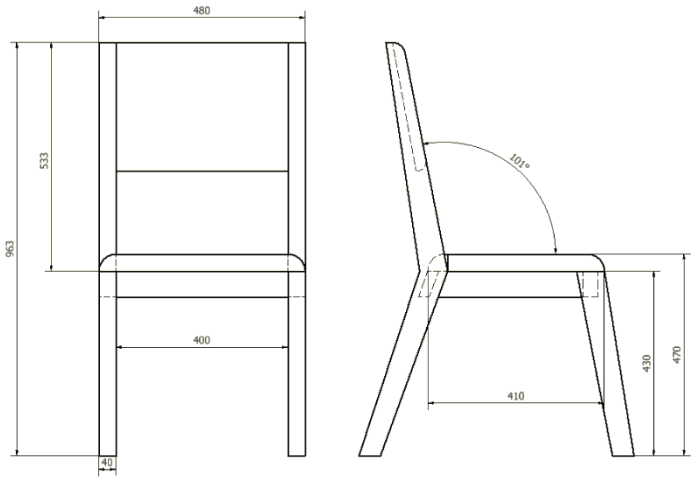

(a)

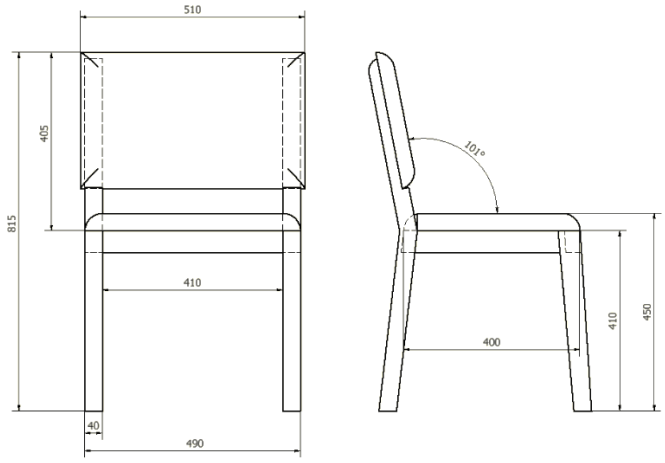

(b)

Figure 5. Chair design images (a) current student chairs (b) re-designing student chair

In response, a new set of chair dimensions was proposed with the goal of reducing the mismatch rates without altering the structural or functional features of the existing chair model (Figure 5). The redesign focused on key problematic parameters, such as seat height, seat depth, seat width, and backrest dimensions, as summarized in Table 1. The seat height was reduced from 430 mm to 410 mm to better correspond with students' popliteal height, allowing proper foot placement on the floor and minimizing thigh compression. The seat depth was shortened from 410 mm to 400 mm, enabling users to sit fully against the backrest and maintain a natural lumbar curve yet also reduce the material to build a chair. Seat and backrest widths were slightly increased, from 480 mm to 510 mm and 480 mm to 490 mm, to improve lateral comfort and hip accommodation, while the backrest height was significantly reduced from 533 mm to 405 mm to provide adequate upper back and shoulder support, especially for female users.

Table 1. Mismatch Percentage Current chair vs Re-Designing Chair

Parameter	Dimension (mm)		Mismatch Percentage (Man)			Mismatch Percentage (Woman)		
	Current Chair	Re-Design Chair	Current Chair	Re-Design Chair	Improvement	Current Chair	Re-Design Chair	Improvement
Seat Height (SH)	430	410	75%	38%	**37%**	90%	75%	**15%**
Seat Depth (SD)	410	400	9%	16%	**−7%**	25%	20%	**5%**
Seat Width (SW)	480	490	22%	25%	**−3%**	70%	60%	**10%**
Backrest Height (BH)	533	405	94%	3%	**91%**	100%	5%	**95%**
Backrest Width (BW)	480	510	22%	0%	**22%**	0%	0%	**0%**

Although these dimensional modifications slightly altered the visual proportions of the chair, the redesign prioritized ergonomic compatibility with student anthropometry rather than aesthetic considerations. As shown in Table 1, the redesigned chair substantially reduced mismatch percentages across most parameters. The seat height mismatch (C vs SH) decreased from 75% to 38% for men and from 90% to 75% for women, indicating improved lower-limb support. The backrest height (A vs BH) showed the most significant improvement, with mismatch rates dropping from 94% to 3% for men and from 100% to 5% for women, suggesting that the redesigned backrest better supports upper-body posture.

For seat depth (B vs SD) and seat width (D vs SW), the mismatch increased slightly among male students (9% to 16% and 22% to 25%, respectively), but these values remain relatively low and represent the best compromise achievable within the design constraints while improving compatibility for female students. In population-based ergonomic design, achieving optimal compatibility for the majority of users is often prioritized over eliminating mismatch for a single subgroup. Similar trade-offs are commonly reported in seating ergonomics, where comfort is primarily influenced by posture, pressure distribution, and overall anthropometric fit rather than perfect dimensional matching for every individual [10] [18]. Overall, the redesigned chair demonstrates substantial ergonomic improvement, particularly in backrest height, seat height, and backrest width, which are key determinants of seated posture and comfort during prolonged classroom activities.

To further validate the adequacy of the redesign, the proposed dimensions were compared with several recognized ergonomic furniture standards, including the Indonesian SNI, ISO 9241-5, BIFMA G1, and EN 1335-1 (Table 2) [26][27][28][29]. The new seat height of 410 mm meets SNI requirements (≥380 mm) and falls within BIFMA's recommended range (380–560 mm), maintaining a knee angle close to 90° in accordance with ISO principles. The seat depth of 400 mm complies with BIFMA's fixed-depth limit (≤430 mm), preventing pressure behind the knees and promoting effective lumbar support. The seat width of 490 mm exceeds both SNI (≥400 mm) and BIFMA (≥450 mm) minimums, providing sufficient space for hip breadth and lateral movement. The backrest height of 405 mm keep in line with all recommendations (400–550 mm), offering full thoracic and shoulder support, while the backrest width of 510 mm ensures balanced lateral stability.

Table 2. Redesigned Chair compared to national and international Standards

Parameter	Redesigned Student Chair	SNI (Indonesia)	ISO 9241-5 (Fit Principle)	BIFMA G1 (ANSI)	EN 1335-1:2020 (Europe)
Seat Height (SH)	410 mm	Min 380 mm	Should allow feet flat, knees ≈ 90°	Adjustable 380–560 mm	Adjustable (type-dependent)
Seat Depth (SD)	400 mm	Min 340 mm	Less than buttock–popliteal length	≤ 430 mm (fixed); adjustable preferred	Adjustable seat depth required
Seat Width (SW)	490 mm	Min 400 mm	Wider than user hip breadth	≥ 450 mm	Seat width & lumbar adjustable
Backrest Height (BH)	405 mm	Not specified	Should support thoracic/lumbar comfortably	Not explicitly fixed	Adjustable lumbar + backrest angle
Backrest Width (BW)	510 mm	Not specified	Should allow free arm movement	≈ seat width (≥ 450 mm recommended)	Adjustable backrest + armrest
Adjustability	Not adjustable	Not specified	Required for 5th–95th fit	Seat height, depth, recline	Seat, backrest, lumbar, armrest must be adjustable

Although the new design substantially reduces mismatch and demonstrates close alignment with international ergonomic principles, the lack of adjustability remains a key limitation. Major standards such as ISO 9241-5, EN 1335-1, and BIFMA G1 emphasize adjustability to accommodate users across the 5th–95th percentile range. While the current redesign offers significant ergonomic improvement for most students, future iterations should integrate adjustable features, such as variable seat height, seat depth, and backrest inclination, to enhance flexibility and inclusivity across diverse body types.

To ensure that these dimensional improvements translate into actual reductions in musculoskeletal risk, subsequent studies should include usability testing and postural assessments using standardized tools such as RULA, REBA, or ROSA. These evaluations will help confirm whether the redesigned chair effectively minimizes physical strain and improves sitting comfort, particularly for female students who previously exhibited higher rates of MSD symptoms. Ultimately, this anthropometry-based redesign represents a crucial step toward developing student seating that not only meets dimensional standards but also promotes health, comfort, and learning efficiency in educational environments.

CONCLUSIONS

The findings of this study demonstrate a clear link between musculoskeletal discomfort (MSD) and dimensional incompatibility between chairs and students' anthropometric characteristics. The Nordic Body Map (NBM) results revealed a high prevalence of discomfort, particularly among female students. This finding is corresponding closely with the identified mismatches in chair dimensions, most notably in seat height and backrest height. These mismatches are consistent with previous ergonomic studies emphasizing that disproportionate furniture dimensions increase postural strain and MSD. The redesigned chair, successfully reduced the mismatch rates across most parameters indicating a significant improvement in ergonomic fit and comfort potential. While the new dimensions show better conformity with both SNI and international ergonomic standards such as ISO 9241-5 and BIFMA G1, the lack of adjustable features remains a limitation in achieving full compliance with global ergonomic expectations. Overall, this research provides empirical evidence that anthropometry-based redesign effectively enhances the compatibility between user and furniture dimensions, thereby reducing potential MSD risk. Future work should include usability and posture analysis (e.g., RULA, REBA, or ROSA) and the integration of adjustable features to further align the design with international ergonomic standards and support divers

BIBLIOGRAPHY

[1] A. Kautsar and R. Dewi, 'Ergonomic seating in the workplace: Implications for musculoskeletal health and productivity', *Indonesian Journal of Occupational Health*, vol. 15, no. 3, pp. 45–54, 2020.

[2] N. Maulina, W. Putri, and M. Iskandar, 'Assessment of Musculoskeletal Disorders in Industrial Settings: An Ergonomic Perspective', *Journal of Applied Ergonomics*, vol. 31, no. 2, pp. 110–121, 2023.

[3] A. Kautsar and S. Putri, 'Anthropometric Data in Industrial Design: Application in Furniture Manufacturing', *Furniture Industry Research Journal*, vol. 22, no. 1, pp. 12–29, 2021.

[4] E. Sopyana and Jazuli, 'Perancangan Kursi Sekolah untuk Anak Autis yang Ergonomis dengan Pendekatan Metode Rasional', Surabaya, Apr. 2025. doi: 10.31284/j.senopati.2025.v7i1.7998.

[5] T. R. Fitrianto, G. Prakoso, A. R. Nugroho, A. S. Afifah, S. Anggiriani, and R. Widiastuti, 'Evaluation of Office Chairs to Enhance Comfort and Reduce Musculoskeletal Risk in Sedentary Work Environments', *Jurnal SENOPATI : Sustainability, Ergonomics, Optimization, and Application of Industrial Engineering*, vol. 6, no. 2, pp. 114–121, Apr. 2025, doi: 10.31284/j.senopati.2025.v6i2.6750.

[6] T. R. Fitrianto *et al.*, 'Evaluation Of Office Chair Design From Ergonomic And Anthropometric Perspectives', *J@ti Undip: Jurnal Teknik Industri*, vol. 20, no. 3, pp. 148–154, Sep. 2025, doi: 10.14710/jati.20.3.148-154.

[7] G. A. Vos, J. J. Congleton, J. Steven Moore, A. A. Amendola, and L. Ringer, 'Postural versus chair design impacts upon interface pressure', *Appl. Ergon.*, vol. 37, no. 5, pp. 619–628, Sep. 2006, doi: 10.1016/j.apergo.2005.09.002.

[8] S. Lee, F. C. De Barros, C. S. M. De Castro, and T. De Oliveira Sato, 'Effect of an ergonomic intervention involving workstation adjustments on musculoskeletal pain in office workers—a randomized controlled clinical trial', *Ind. Health*, vol. 59, no. 2, pp. 78–85, 2021, doi: 10.2486/indhealth.2020-0188.

[9] C. Parcells, M. Stommel, and R. P. Hubbard, 'Mismatch of classroom furniture and student body dimensions', *Journal of Adolescent Health*, vol. 24, no. 4, pp. 265–273, Apr. 1999, doi: 10.1016/S1054-139X(98)00113-X.

[10] A. Naddeo, R. Califano, and P. Vink, 'The effect of posture, pressure and load distribution on (dis)comfort perceived by students seated on school chairs', *International Journal on Interactive Design and Manufacturing (IJIDeM)*, vol. 12, no. 4, pp. 1179–1188, Nov. 2018, doi: 10.1007/s12008-018-0479-3.

[11] L. D. O. dos Santos, I. F. D. Arraes, H. B. S. R. Tavares, and L. do N. Cunha, 'ESTUDO E ANÁLISE ANTROPOMÉTRICOS DE CADEIRAS DE ESCRITÓRIOS MODERNAS', *Revista ft*, pp. 35–36, Aug. 2024, doi: 10.69849/revistaft/ra10202408291435.

[12] N. Ahmad, A. R. Ismail, D. Mohamad, N. S. Sonie Palate, and A. F. Kamaruzzaman, 'Improving Classroom Chairs for Student Comfort and Health: An Ergonomic Approach', *Journal of Human Centered Technology*, vol. 3, no. 1, pp. 22–28, Feb. 2024, doi: 10.11113/humentech.v3n1.65.

[13] R. Rajora, 'Ergonomic Optimization of School Chairs: A Biomechanics-Based Approach to Reducing Back Strain in Students', *International Journal For Multidisciplinary Research*, vol. 7, no. 4, Aug. 2025, doi: 10.36948/ijfmr.2025.v07i04.53728.

[14] E. Nurmianto, *Ergonomi: Konsep dasar dan aplikasinya*, 2nd ed. Surabaya: Guna Widya, 2004.

[15] M. G. Helander, *A Guide to the Ergonomics of Manufacturing*. CRC Press, 2006.

[16] K. H. E. Søndergaard, C. G. Olesen, E. K. Søndergaard, M. de Zee, and P. Madeleine, 'The variability and complexity of sitting postural control are associated with discomfort', *J. Biomech.*, vol. 43, no. 10, pp. 1997–2001, Jul. 2010, doi: 10.1016/j.jbiomech.2010.03.009.

[17] N. Ahmad, A. R. Ismail, D. Mohamad, N. S. Sonie Palate, and A. F. Kamaruzzaman, 'Improving Classroom Chairs for Student Comfort and Health: An Ergonomic Approach',

Journal of Human Centered Technology, vol. 3, no. 1, pp. 22–28, Feb. 2024, doi: 10.11113/humentech.v3n1.65.

[18] D. B. Chaffin, G. B. J. Andersson, and B. J. Martin, *Occupational Biomechanics*, 4th ed. New Jersey: John Wiley & Sons, 2006.

[19] I. Dianat, M. A. Karimi, A. Asl Hashemi, and S. Bahrampour, 'Classroom furniture and anthropometric characteristics of Iranian high school students: Proposed dimensions based on anthropometric data', *Appl. Ergon.*, vol. 44, no. 1, pp. 101–108, Jan. 2013, doi: 10.1016/j.apergo.2012.05.004.

[20] A. Hedge, *Ergonomic Workplace Design for Health, Wellness, and Productivity*. CRC Press, 2016. doi: 10.1201/9781315374000.

[21] S. Pheasant and C. M. Haslegrave, *Bodyspace: Anthropometry, Ergonomics and the Design of Work*. CRC Press, 2018.

[22] J. Panero and M. Zelnik, *Human Dimension and Interior Space A Source Book of Design Reference Standards*, 1st ed. New York: Whitney Library of Design, 1979.

[23] Badan Standardisasi Nasional, 'Standar Nasional Indonesia 8780:2019 Furnitur - Kursi kerja kantor', Aug. 30, 2019, *Badan Standardisasi Nasional*.

[24] International Standard Organization, 'ISO 9241-5:2024 Ergonomics of human-system interaction Part 5: Workstation layout and postural requirements', Aug. 2024, *International Standard Organization*.

[25] Business and Institutional Furniture Manufacturers Association., 'ANSI/BIFMA G1–2013 (R2022) Ergonomics Guideline for Furniture Used in Office Work Spaces Designed for Computer Use', Jan. 12, 2013, *Business and Institutional Furniture Manufacturers Association.*

[26] Iteh Standards, 'EN 1335-1:2020 Office furniture - Office work chair - Part 1: Dimensions - Determination of dimensions', Apr. 22, 2020, *Newark*.